Process Insights
Premium Insights Into Process

extrel

REAL-TIME
GAS ANALYZERS

PRODUCT DATASHEET

MAX300-AIR

Environmental Mass Spectrometer

Fast Response

Process Control

Stable Measurement

- Ambient Air Monitoring
- Flare Gas Analysis
- Industrial Health and Safety

SPECIFICATIONS

System Highlights

Detectable compounds:	Any gas or vapor sample
Detection range:	100% - 10 ppb standard, 10 ppt with membrane inlet*
Number of sample streams:	16, 31,40, 80, 120, 160+
Analysis rate:	<0.4 seconds per component
Number of components:	Unlimited
Number of analysis routines:	Unlimited
Number of user configurable data tags:	Unlimited
Analysis precision:	<0.25% relative standard deviation**
Stability:	<0.5% relative standard deviation over 30 days**
Dual filaments:	One active and one spare with automatic switchover
Maintenance:	Typically two PMs per year

Manual or fully-automated calibration and validation

Mass range options:	1-200, 300, or 500 amu

19 mm high-transmission quadrupole filter

* Documented on trace benzene in air.

** Based on the analysis of 1% argon.

MAX300-AIR System Specifications

Power Supply Options:
- 110 VAC, 50/60 Hz, Two 15 Amp circuits
- 230 VAC, 50/60 Hz, One 20 Amp circuit

Power Consumption:
- Nominal 2500 Watts
- Startup 2750 Watts
- Heat Load: 2500 Watts (8500 BTU/Hr)

Weight:
- Standard Enclosure: 420 lbs (190 kg)
- ATEX Enclosure: 560 lbs (254 kg)
- Optional cart: 40 lbs (18 kg)

Ambient Requirements:
- Temperature: -4°F to 120°F (-20°C to 49°C)
- With A/C, cold start ≥54°F (12°C)
- Area Classification Options:
- General Purpose
- Class 1, Division 2 Groups B, C, D, T3
- Class 1, Division 1 Groups B, C, D, T3
- ATEX Zone 1 or Zone 2, Group II B +H2, T4

Additional Utilities:
- Purge gas (for hazardous area installations)
- Base calibration requirement: 2 gas bottles

Data System and Communications:
- System control interface options: Ethernet, RS-422 4-wire
- Login security levels: Administrator, User, Viewer
- External communications:
  – Ethernet, Modbus serial, digital I/O, analog I/O, OPC

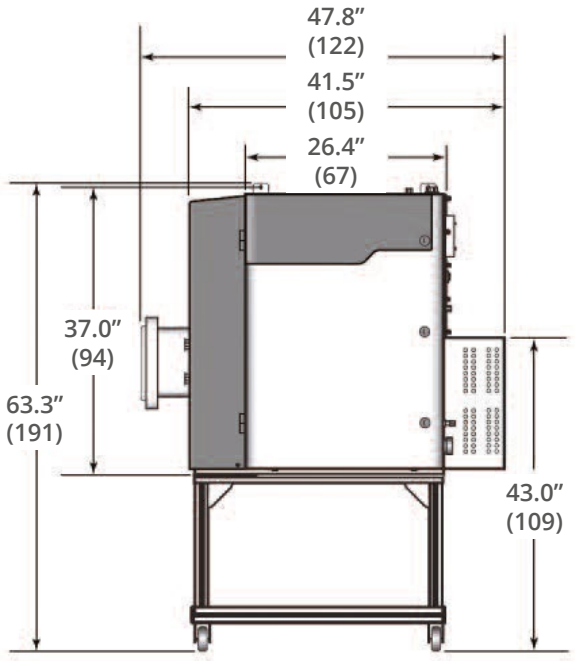

MAX300-AIR standard enclosure dimensions with A/C and Cart

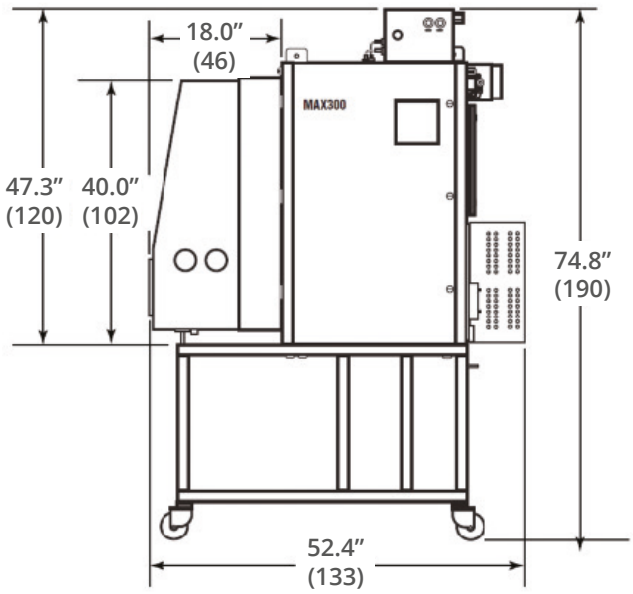

MAX300-AIR ATEX enclosure dimensions with A/C and Cart

Dimensions shown in inches [cm]

Exceptional Worldwide Service and Support

For over 50 years, Extrel has been committed to providing the highest quality support services for the thousands of instruments installed worldwide. Factory trained and certified personnel offer industry-leading support to Extrel customers at every stage of the environmental monitoring application.

Process Insights
Premium Insights Into Process

extrel

REAL-TIME
GAS ANALYZERS

PREMIUM INSIGHTS – GAIN REAL-TIME INSIGHT INTO YOUR PROCESS

Process Insights' products and solutions deliver innovative and differentiated analysis and measurement solutions and technologies that add high value to our customers and protect the environment.

Our commitment is to deliver smart and affordable innovation that optimizes process, improves safety, and transforms our world.

CENTERS OF EXCELLENCE

PROVIDING PROVEN SOLUTIONS FROM A GLOBAL TECHNOLOGY LEADER

Extrel CMS

575 Epsilon Drive
Pittsburgh, PA 15238
USA
+1 412 963 7530
www.extrel.com
info@extrel.com
support@extrel.com

Process Insights – The Americas

4140 World Houston Parkway
Suite 180
Houston, TX 77032
USA
+1 713 947 9591
info@process-insights.com

Process Insights – EMEA

ATRICOM
Lyoner Strasse 15
60528 Frankfurt
Germany
+49 69 20436910
info@process-insights.com

Process Insights – APAC

Wujiang Economic and Technology
Development Zone
No. 258 Yi He Road, 215200 Suzhou
Jiangsu Province China
+86 400 086 0106
info@process-insights.com

OUR PREMIUM GLOBAL BRANDS

ALPHA OMEGA INSTRUMENTS · ATOM INSTRUMENT · extrel · MBW calibration · CosaXentaur · HYGROCONTROL · LAR THE TOC COMPANY · Tigeroptics

www.process-insights.com Copyright © 2021 Process Insights, Inc. All Rights Reserved.