MAX300-IGX Product Note GP-214A

Extrel® MAX300™-IGX Process Mass Spectrometer

The MAX300-IGX Industrial Gas Analyzer is the ATEX version of the Extrel MAX300 industrial quadrupole mass spectrometer. This version is designed to meet the ATEX Zone 1 area classifications typically found in European Union pharmaceutical and petrochemical plants. A version is also available for use in Class 1, Division 1 hazardous areas.

The MAX300-IGX analyzer can be customized to meet your application and site's needs. The process mass spectrometer is available with either an air conditioned or a water cooled stainless steel enclosure. To complement your MAX300-IGX system, Extrel offers the widest and most flexible array of inlet systems, including solenoid and rotary valves. For pharmaceutical drying applications, the analyzer can be coupled with our Actively Controlled Sample System (ACSS) designed to handle the analysis of multiple dryers or lyophilizers at various pressures.

Ambient Requirements:

Area Classifications:	ATEX Zone 1, Group II B + H2, T4 or Class 1, Division 1 Groups B,C,D, T3
Ambient Temperature:	-4ºF to 120ºF (-20ºC to 49ºC) with A/C cold start ≥ 54ºF (12ºC)

MAX300-IGX Applications

Petrochemical

Acetic Acid
Acrylonitrile
Ambient Air Monitoring
Ammonia
Catalysis Research
Ethylene
Ethylene Oxide
Fuel Gas/Natural Gas
Hydrogen
Methanol
Polyethylene/Polypropylene
Vinyl Chloride

Pharmaceutical

Ambient Air Monitoring
Dryers/Vacuum Dryers
Fermentation Headspace
Lyophilizer Monitoring
Solvent Recovery
Waste Water Analysis

Hardware Specifications:

Mass Analyzer:	3/4" (19 mm) High Transmission Quadrupole Mass Filter
Mass Range:	2 - 250 amu standard, 2 - 300 amu optional
Detectable Components:	Any gas or vapor with a molecular weight or fragment ion within the mass range
Number of Components:	Unlimited
Masses per Component:	Unlimited; allows multivariate analysis
Upper Detection Limit:	100%
Lower Detection Limit:	For components with no interference Faraday: 10 parts per million (ppm) Electron Multiplier: 10 parts per billion (ppb)*
Dynamic Range:	Faraday: 5 orders of magnitude (10^5) Dual Faraday/Multiplier: 8 orders of magnitude (10^8)
Analysis Rate:	Typically 400 milliseconds per component
Analysis Precision:	+/- 0.0025 absolute, based on a 1% Argon concentration with no interferences
Analysis Stability:	+/- 0.005 absolute, over 30 days, on a 1% Argon concentration with no interferences
Filaments:	Two, one active and one spare with automatic switchover for continuous operation
Sample Streams:	Unlimited

*As documented on trace analysis of benzene in air

Extrel
Core Mass Spectrometers

Extrel MAX300-IGX Process Mass Spectrometer

Typical Physical Dimensions:

With A/C and Cart:

Weight: 660 lbs (299 kg)
Height: 74.8” (190 cm)
Depth: 25” (64 cm)
Width: 52.4” (133 cm)

With Water Cooler and Cart:

Weight: 500 lbs (227 kg)
Height: 74.8” (190 cm)
Depth: 25” (64 cm)
Width: 43” (109 cm)

Cart Weight: 44 lbs (20 kg)

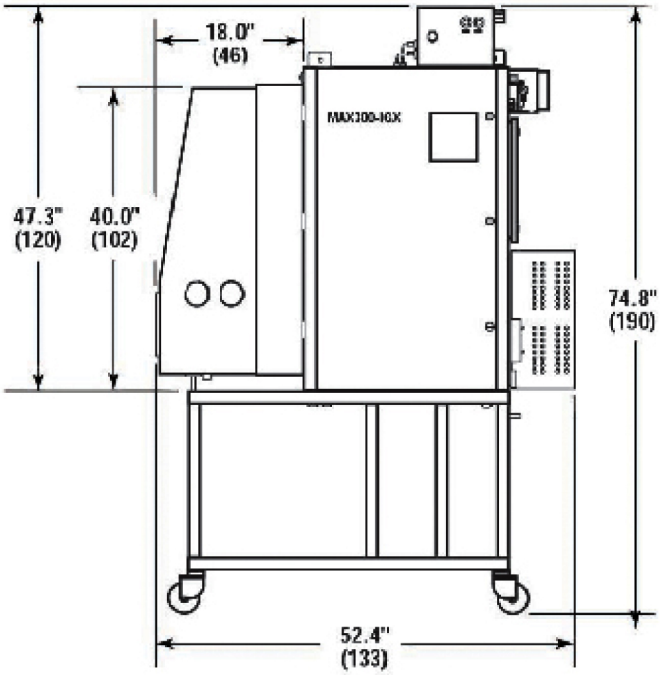

Dimensions in Inches (cm)

Figure 1: Front View MAX300-IGX with A/C and Cart

Utility Requirements:

Power:

Power Supply: 198-253V, 50/60 Hz, 20 Amp circuit

Purge System:

Compressed Air Supply: Clean dry instrument air
Air Pressure: 58-116 psig (4-8 barg)
Fast Purge Minimum Air Flow: 225 NL/min
Recommended Supply Tube: 1/2” pipe or larger
Air Inlet Connection: 1/2” female NPT fitting

Water Cooled Enclosure Option:

Cooling Water Supply: Clean water or antifreeze solution
Coolant Max Temp: 71° F (22°C)
Coolant Pressure: 15-72 psig (1-5 barg)
Coolant Standard Connections: 1/2” female NPT fittings

Data System, Software and Communications:

Software:	Extrel Questor® 5 Process Control Software, a web-based user interface
3 User Security Levels:	Administrator, User, Viewer
Display Unit:	Information and control is transmitted and displayed via Ethernet to a PC with Microsoft Windows® XP operating system and Internet Explorer® browser
Analog Inputs and Outputs:	Unlimited
Digital Inputs and Outputs:	Unlimited
Communications:	Ethernet, Bi-directional Modbus® RTU or TCP/IP, OPC and Analog Outputs

Extrel maintains sales and service offices around the world. Please contact us for the office nearest you or visit our web site at www.extrel.com

Extrel CMS, LLC
575 Epsilon Drive, Pittsburgh, PA 15238-2838 USA
Tel: +1.412.963.7530 Fax: +1.412.963.6578 E-mail: info@extrel.com
www.extrel.com
Copyright 2008 Extrel CMS, LLC

GP-214A 032009

Extrel
Core Mass Spectrometers

All specifications are subject to change without notice.

Extrel® is a registered trademark of Extrel CMS, LLC. MAX300™ is a trademark of Extrel CMS, LLC. Questor® is a registered trademark of ABB Process Analytics, Inc. Windows® and Internet Explorer® are registered trademarks of Microsoft Corporation. Modbus® is a registered trademark of Schneider Automation, Inc.